NMSR REPORTS

NMSR *Reports*

The Newsletter of the
New Mexicans for Science and Reason

NMSR *Reports*, David E. Thomas, Editor, 801 Fitch Ave., Socorro, NM 87801 © 2019

NOVEMBER MEETING:

NEW MEXICANS FOR SCIENCE AND REASON will hear

Ben Radford

on "The Long Island Medium"

7:00 PM November 13th, 2019

==>*CNM MAIN CAMPUS, Student Resource Center*<==

==>Room 204<==

Bring a friend!

FUTURE MEETINGS ANNOUNCED

November 13th, 2019 NMSR Meeting:

Ben Radford, on "The Long Island Medium."

Ben Radford's topic for November is TLC's "Long Island Medium" Theresa Caputo, who appeared in New Mexico, at the Isleta Resort & Casino, on October 26th. Come to the November meeting to get the inside scoop!

Ben is deputy editor of Skeptical Inquirer science magazine, and a Research Fellow with the non-profit educational organization the Committee for Skeptical Inquiry. He has written over a thousand articles on a wide variety of topics, including urban legends, the paranormal, critical thinking, and science literacy. He holds degrees in psychology and education and is a member of the American Folklore Society.

Join us for "Skeptic meets Psychic!" at **7:00 PM November 13th, 2019**, CNM MAIN CAMPUS, Student Resource Center, Room 204.

December 11th, 2019 NMSR Meeting:

Dave Thomas, on "The War of the Weasels: How an Intelligent Design Theorist was Outfoxed by a Genetic Algorithm." 7 PM, December 11th, 2019.

January 8th, 2020 NMSR Meeting:

Professor **Peter Fawcett**, UNM Earth & Planetary Sciences department chair, on "The Paleoclimate Records of New Mexico." 7PM January 8th, 2020.

New Mexicans for Science & Reason (NMSR)

NMSR is a non-profit group with the goals of promoting science, the scientific method, rational thinking, and critical examination of dubious or extraordinary claims. NMSR meets at 7 PM on the second Wednesday of each month, in Albuquerque, New Mexico, at CNM's Student Resource Center, room 204 (@ Richard Barr Boardroom). NMSR Reports is its official newsletter.

Membership: $**25**/year (hardcopy newsletter), or **$15**/year (downloadable PDF), make your check **payable to NMSR**, send to treasurer (Debbie Thomas).

Cyber-Cypher Clue: X = V.

Bonus Puzzle Clue: It's both Series *and* Parallel!

WANTED: READER ARTICLES & COMMENTARY

Got something to share with NMSR members? Send it in! ATTN: Dave Thomas, Editor, NMSR Reports.

REMEMBER, our next NMSR meeting is at 7 PM on **WEDS., NOVEMBER 13th, 2019**, at Student Resource Center, room 204 **at CNM!**

PUZZLE TIME!

[*Please send solutions to Dave Thomas at: nmsrdave@swcp.com, or at 801 Fitch Ave., Socorro NM 87801.]*

Cyber-Cypher: NOVEMBER PUZZLE

(Submitted by Dave Thomas)

The following letters are a simple substitution cypher. If R stands for L, R will stand for L everywhere. Your Cyber-Cypher Clue: Clue? Oh, well - if you must, see p. 2.

"M Y O L P Y L O M N Z L D L Q N B B W G A W N W G L, H P K O A Q B W K B P ' N I L C O L X L O P M Y O L P Y L, N Z L P Q B W ' G L Z B C K O P F L X L G Q I B K Q I H Y D ." - I O C C P Q L

SUPER SECRET WORD!

However you prefer to do the cypher itself (above or below), simply duplicate those actions on the alphabetized row of cypher letters below. You'll build an answer key, and you'll also reveal - the Super Secret Word!

A B C D E F G H I J K L M N O P Q R S T U V W X Y Z

OCTOBER CYPHER SOLUTION

"KNOWING HOW TO THINK EMPOWERS YOU FAR BEYOND THOSE WHO KNOW ONLY WHAT TO THINK." - NEIL DEGRASSE TYSON

Esteemed October Code Crackers: Mike Arms*, Austin Moede* and Terry Lauritsen*!

*Secret Word: "BIG THEORY DAWNS"

SOCORRO STUMPER

Need more Secret Word Cryptograms?

New puzzles every week at www.nmsr.org/SocorroStumper.htm

November Bonus:

"Vive la Resistance"

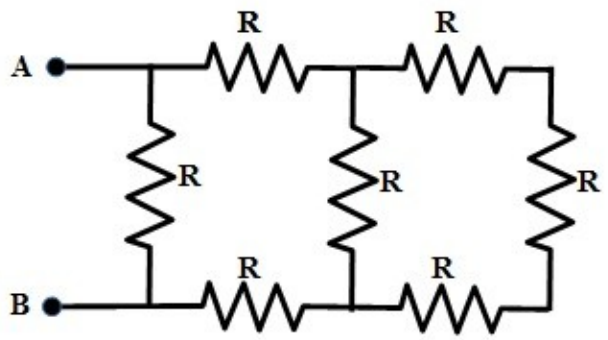

The November Bonus*:* if the resistances R in the circuit above all equal 15 ohms, what is the resistance between contacts A and B?

October Bonus : "Pretty Prime Powers"

Submitted by Dave Thomas

The October Bonus is a variation on September's theme: Solve for X, in $\mathbf{3^X = X^7}$.

Answer: There are two solutions.

Iterating x = 3^(x/7) converges to 1.208929074539…, while iterating x = lnx*7/ln3 goes to 18.63866623405…

Either x is a solution of $3^X = x^7$.

Congrats: Gene Aronson (NM), Mike Arms (NM), and Harold H. Gaines (KS).

October 9th, 2019 NMSR Meeting:

Milton Vernon on "US production of medical diagnostic isotopes"

Milt Vernon, formerly at Sandia National Labs, is part of a venture to bring a vital medical isotope to market. The isotope is ^{99m}Tc (Technetium-99), a fast-decaying isotope that can be made to bind to cells of interest (cancer cells, for example) and imaged via their radioactive decays. The source of the technetium is the radioactive isotope ^{99}Mo (molybdenum-99), which is obtained as a byproduct of the fission of Uranium-235 (^{235}U). Typically, uranium targets are irradiated by neutrons to form ^{99}Mo, which has to be separated from other fission products in a hot cell. The moly product has a 66-hour halflife, which allows time for transportation around the country. Once near its destination, the fast-decaying technetium-99 (half life of 6 hours) is harvested, and used as soon as possible for medical tests. ^{99m}Tc is used in around 13,000,000 medical diagnostic procedures per year in the U.S.

The U.S. once produced its own supply of technetium-99m, using targets of highly-enriched uranium (HEU). However, there has not been a domestic supply available since Cintichem operation ceased in the late 1980s. At that time, DOE developed the capability at Sandia National Laboratory, in a project Milton worked on for years. But, the program was terminated in 1999, because the Canadian Maple reactor production was allegedly imminent, "any day now." Unfortunately, the Canadians ran into technical and financial snags, and their program never materialized. Decades later, we are still without the means to produce this important isotope in the Unitred States. The U.S. supply situation is no better than it was in the early 90s – it is dependent on foreign sources, and is subject to interruptions.

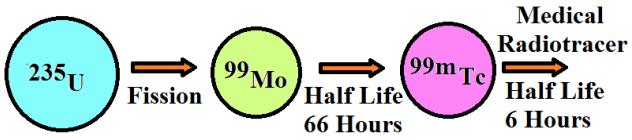

Any new production capability must be able to use low-enriched uranium targets (LEU), because the government is curtailing access to weaponizable HEU, due to new non-proliferation requirements from Homeland Security. All major production worldwide uses HEU targets, with the HEU supplied by the U.S. There is pressure to cease the HEU supply in five to seven years. Meanwhile, the U.S. medical community is currently receiving less than half its need.

Vernon said there are four alternatives to deal with the looming shortage. (1) Maintain Status Quo: Rely on Foreign Sources. This entails frequent supply interruption, and possible permanent supply reduction, continued need for HEU, and lengthy security delays. This option is unacceptable, Milton said. Option (2) involves adapting existing U.S. Reactors: supplement foreign sources for major supply, modify selected research reactors for fractional production, and build new on-site Hot Cells. This is marginally acceptable, Vernon said. Option (3) is Developing Alternative Technology: explore and develop accelerator production, reactor neutron activation, and coupled accelerator/reactors. But, non-fission gives low

specific activity, and coupled systems (multipliers) have no advantage over reactors. The research would be fun, but wouldn't resolve the crisis. The best available option, Milton said, was (4) Develop and Construct new reactors.

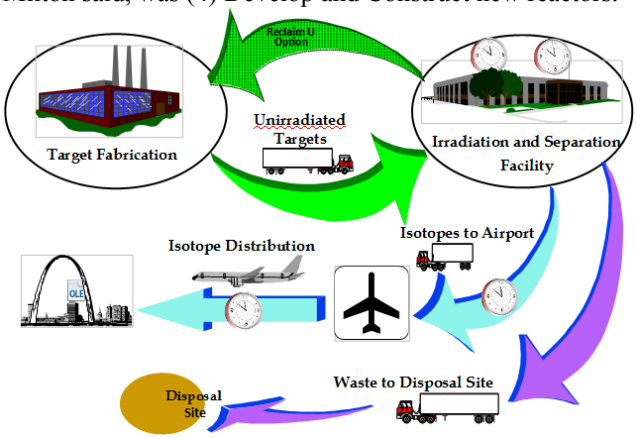

The most viable solution to the chronic radionuclide supply problem faced by the U.S. medical community, he said, is the development of a domestic and dedicated single-purpose LEU-based reactor, collocated with a separation processing facility, and capable of supplying 100-200% of U.S. demand for the principle clinical radionuclide, ^{99}Mo. The reactor system should be low power, be based on proven technology, be passively safe, and have a target power to total reactor power ratio close to 1 in order to minimize environmental, reliability, safety, licensing, and waste issues, to minimize both capital and operating costs. The reactor and processing facility should be located near an air transportation hub.

Vernon and several other principals of the Eden group are well under way with the project, and have a working design for a Natural Convection Pool-Reactor Design. For this, criticality can be achieved with ~ 10 kg of 20% 235U enriched fuel (LEU), surface peak power densities of ~ 60 W/cm^2, physical sizes ranging from 1-3 ft in diameter and height, and normal operation 20-30 ft below the pool's surface. Vernon's group has developed a detailed design for the facility, which has its own reactor and pool, a hot cell area, waste disposal processing, and more. The facility will be located in the southwest corner of the state, near Eunice, and is near a source of LEU (URENCO), as well as a low-level waste disposal facility across the border in Texas (WCS). The group will use its own air plane to transport the time-sensitive isotopes as needed. The project is dedicated to isotopes only, reuses fuel, and requires small amounts of fuel annually. The project has been fully funded by the Yates family, and is not looking for investors. It is hoped to be operational by 2029.

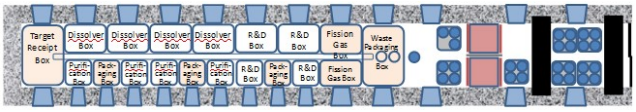

NMSR thanks Milton Vernon for a fascinating presentation.

DUES check the date on your mailing label. If it's time for you to renew, or to make a contribution, please make your check **payable to NMSR**, and send it to Debbie Thomas, NMSR Treasurer, 3205 Alcazar NE, Albuquerque., NM 87110

Name _____

Address_____

Membership $25 per annum (hard copy newsletter), or $15 per annum (online newsletter).

The NMSR e-mail list is fun! It's an e-mail list with news announcements of interest to NMSR members, discussions about news of the times, and more. To join, send a request to nmsrdave@swcp.com.

Thanks to: John Covan, Eddy Jacobs, Debbie Thomas, and all our Puzzlers!

NMSR Reports Vol. 25, No. 11 November 2019
David E. Thomas, Editor (505) 410-0753
801 Fitch Ave, Socorro NM 87801

IN THIS ISSUE:

Future Meetings Announced

New Puzzles!

October meeting: Vernon on Medical Isotopes

NOVEMBER MEETING BEN RADFORD on Long Island Medium Nov. 13th, 2019 7PM